**For Enclosure 12" and Taller**

| ELEMENT MODEL | DIM. X |
|---|---|
| ¾ " Tube | 2 ¾ " |
| 1 " Tube | 3 " |
| 1 ¼ " Tube | 3 " |

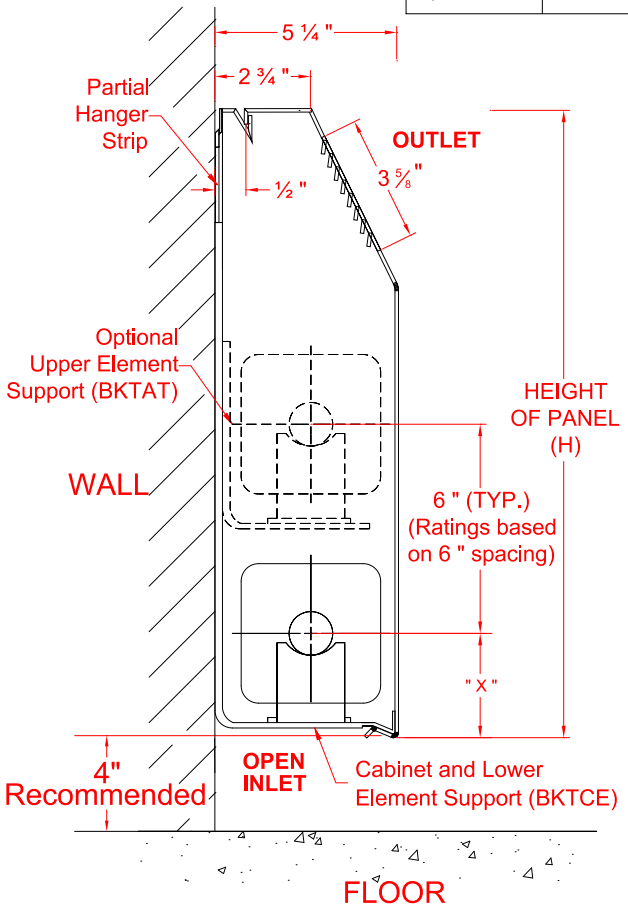





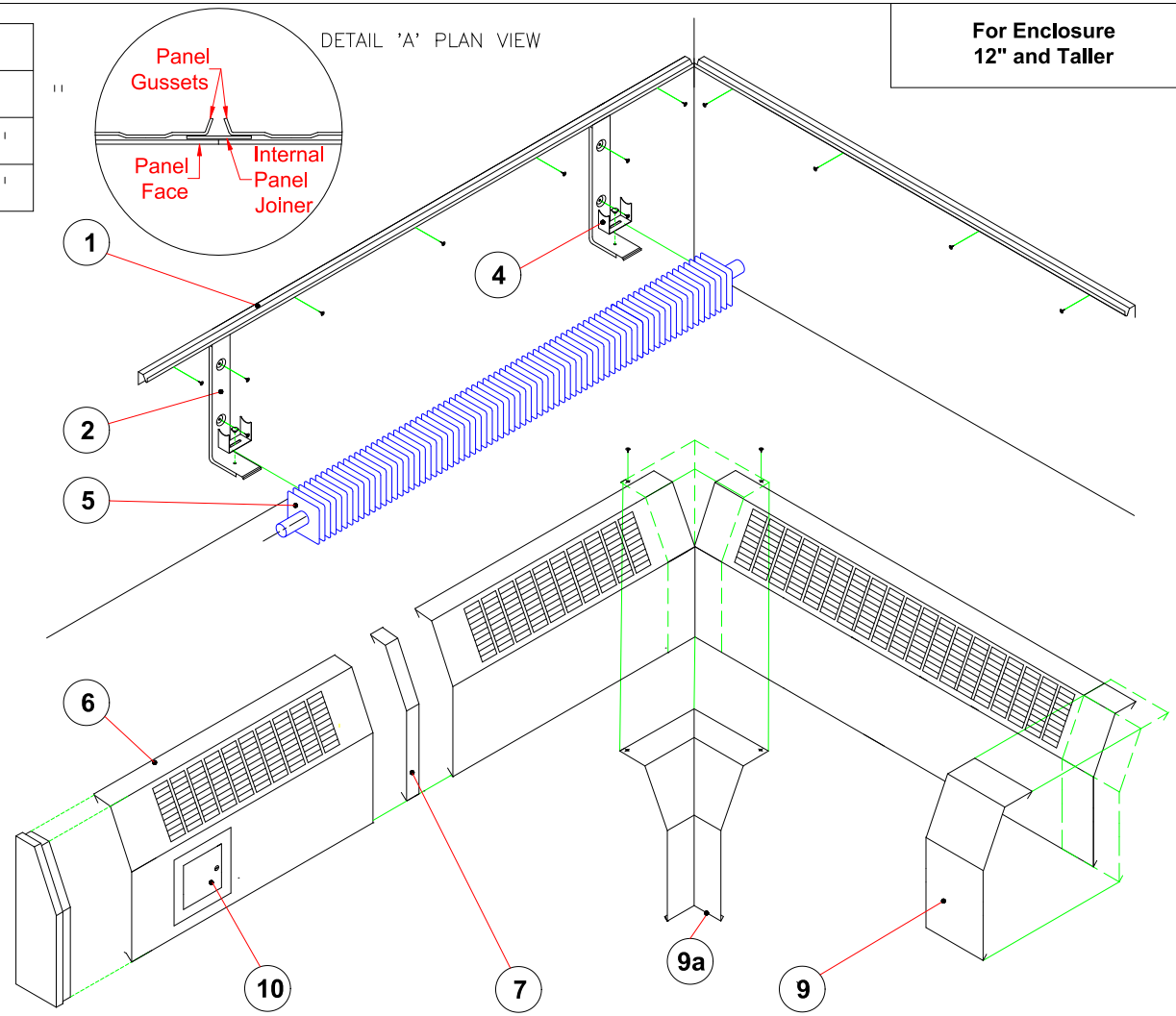


① Fasten hanger strip to wall at required height. Ensure strip is level and that the hanger strip runs the entire length of enclosure.
② Mount BKTCE brackets flush to and under the hanger strip.
③ For 2 tier elements, mount and fasten BKTAT brackets on to the BKTCE brackets.
④ Install cradles onto brackets by placing cradle on bracket and insert the plastic fastener through the slot in the cradle into the hole in the bracket.
⑤ Install heating element onto BKTCE brackets (and BKTAT brackets if used).
Ensure tubing rests on cradle.
⑥ Place top of enclosure panel onto hangerstrip and snap bottom of panelonto the BKTCE bracket.
⑦ For 2 or more side by side enclosure panels, join by an internal panel joiner. (See Detail 'A')
⑧ If an access panel is used, join access panel to enclosure panel by a joiner strip and an additional mounting bracket. (not shown)
⑨ Hook bottom of trim strip on bottom of enclosure panel,swing trim up and hook top of trim on to the top of enclosure/hanger strip. For corners (9a), fasten at top by #10 screws.
⑩ If an access door is required, locate it on enclosure panel, cut out a 5 1/2" square opening and drill four 1/4" diameter holes on corners of 6 1/2"square. Mount and fasten access door assembly.